°sphere

Belgian architect Bart Lens needed a large lamp that would create an encircling sphere of light above the conference table in their office, and so began the search. After a long and fruitless quest, he finally decided to design his own mega-light with the “sphere” of a dome. The result has been likened to a “Calimero” dome, a giant bell, a half moon…. Everybody seems to have a different name for it.

Design by Bart Lens

°sphere large / architect Lens°ass

°sphere large / office

°sphere large / House Roeselare, Belgium - architect Lens°ass - photograph by Bieke Claessens

°sphere large / "Rabbit Hole", Belgium - architect Lens°ass - photograph by Philippe van Gelooven

°sphere large / 'Offices Mars Company', Moscow - realised by LT Project - architect UNK Project

°sphere large / Concept Store Hasselt, Belgium - architect Lens°ass - photograph by Philippe van Gelooven

°**sphere large** / Indera upholstery - photograph by Decovan - Home-Art

°sphere large / b&b moka & vanille, Heusden-Zolder - moka-projects

°sphere large / MRKT - Hirshleifers, NY, USA

°sphere large with imitation gold leaf / MRKT - Hirshleifers, NY, USA

°sphere large / Grey Toned, the Netherlands - architect Studio Niels

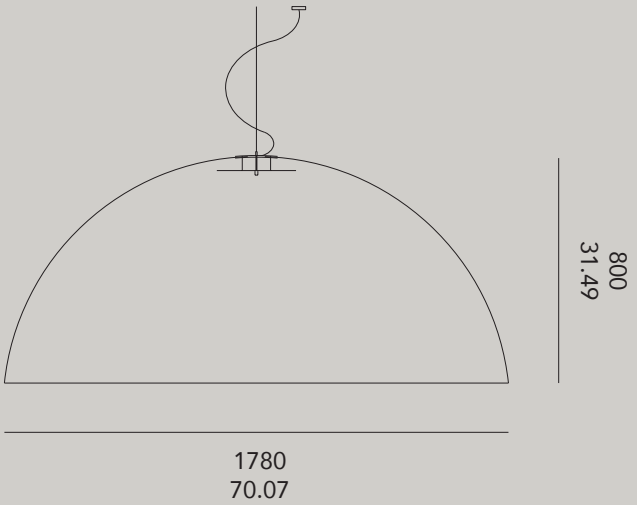

°sphere large 178

SPH.L.127.000	1 x E27 socket - excl lamp
SPH.L.227.000	2 x E27 socket - excl lamps
SPH.L.327.000	3 x E27 socket - excl lamps
SPH.L.427.000	4 x E27 socket - excl lamps
SPH.L.227.0PD	2 x E27 socket with pull dimmer - excl. light bulbs
SPH.L.327.0PD	3 x E27 socket with pull dimmer - excl. light bulbs
SPH.L.1LED.10V	1 x LED module 3000lm cri90+, 37,5W, dimmable (1-10V)*
SPH.L.1LED.DAL	1 x LED module 3000lm cri90+, 37,5W, dimmable (DALI)*
SPH.L.3LED.PHA	3 x LED module 3750lm cri90+, 46,5W, dimmable (phase cut)*
SPH.L.3LED.10V	3 x LED module 9000lm cri90+, 112,5W, dimmable(1-10V)*
SPH.L.3LED.DAL	3 x LED module 9000lm cri90+, 112,5W, dimmable(DALI)*
SPH.L.LEDV2.DAL	1 x LED disc 4000lm, 3000K
	*2700K Warm white, 3000K on request
PLX.SPH.50	coverplate diffuser plexi 50 cm Ø

material: ABS plastic, optional RAL colors / gold leaf both inside and out - weight: 25,5 kg / 899,48 oz
included : 2 m cable, ceiling rose and suspension - 230VAC - max 250W

°sphere small / Beach house Knokke - architect Glenn Reynaert - photograph by Hendrik Biegs

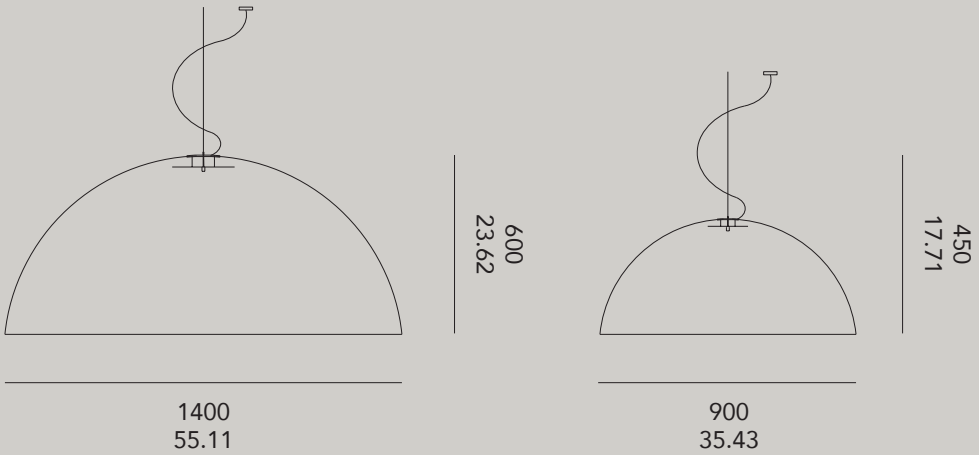

°sphere medium 140	°sphere small 90	
SPH.M.127.000	**SPH.S.127.000**	1 x E27 socket - excl lamp
SPH.M.227.000	**SPH.S.227.000**	2 x E27 socket - excl lamps
SPH.M.327.000	**SPH.S.327.000**	3 x E27 socket - excl lamps
SPH.M.427.000	**SPH.S.427.000**	4 x E27 socket - excl lamps
SPH.M.227.0PD	**SPH.S.227.0PD**	2 x E27 socket with pull dimmer - excl. light bulbs
SPH.M.327.0PD	**SPH.S.327.0PD**	3 x E27 socket with pull dimmer - excl. light bulbs
SPH.M.1LED.PHA	**SPH.S.1LED.PHA**	1 x LED module 1250lm cri90+, 15,5W, dimmable (phase cut) 2700K warm white*
SPH.M.1LED.10V	-	1 x LED module 3000lm cri90+, 37,5W, 2700K warm white*, dimmable (1-10V)
SPH.M.1LED.DAL	-	2700K warm white*, dimmable (DALI)
SPH.M.3LED.PHA	-	3 x LED module 3750lm cri90+, 46,5W, Dimmable (phase cut) 2700K warm white*
SPH.M.3LED.10V	-	3 x LED module 9000lm cri90+, 112,5W, 2700K warm white*, dimmable (1-10V)
SPH.M.3LED.DAL	-	2700K warm white*, dimmable (DALI)
SPH.M.LEDV2.DAL	-	1 x LED disc 4000lm + coverplate, 3000K
		*3000K on request
PLX.SPH.35		coverplate plexi 35 cm Ø
PLX.SPH.50		coverplate plexi 50 cm Ø

material: ABS plastic, optional RAL colors / gold leaf both inside and out - weight M: 13,5 kg - 476 oz - weight S: 5 kg - 176 oz

included: 2 m cable, ceiling rose and suspension - 230VAC - sphere small: max 100W - sphere medium: max 150W

lightsources for °sphere

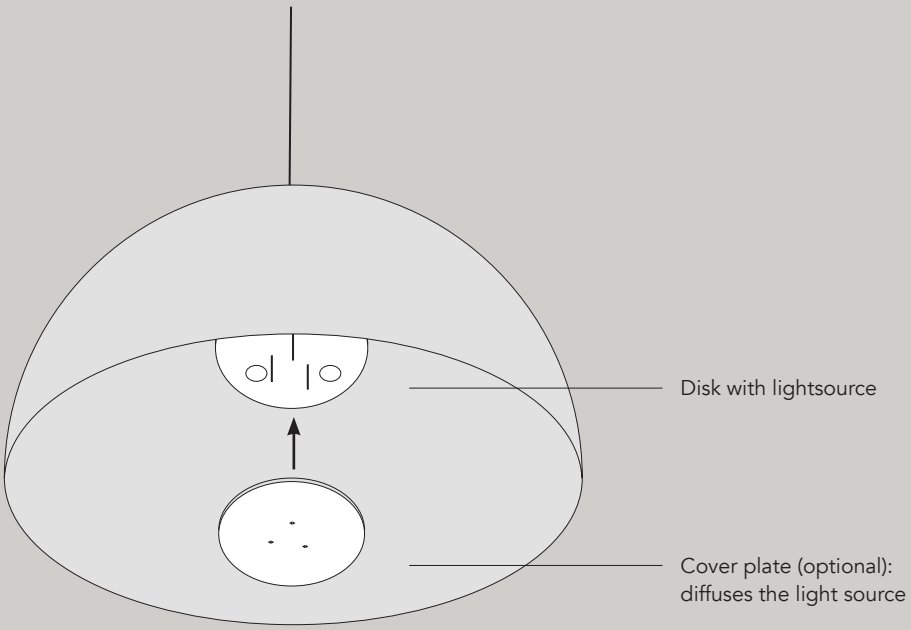

1 x socket E27 (diam. 150mm)
excl. light bulbs

3 x socket E27 (diam. 300mm)
excl. light bulbs

1 x LED module (diam. 300mm)

1 x LED disc (diam. 315mm)
with coverplate 350mm (incl.)
(equal light source)

3 x LED module (diam. 400mm)

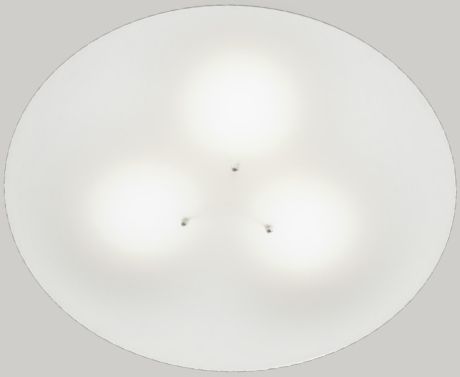

3 x LED module (diam. 400mm) or
3 x E27 (diam. 300mm)
with cover plate 500mm